Parryware

AMBER

Ref. G3414A1

Amber is sophistically designed faucet that encompasses a sleek body with hard edges, coordinating with a variety of styles with ease.

AMBER basin Mixer w/O popup

Aerator type: Integrated aerator
Application place: Basin
Check valve
Cold water tap
Diverter: Manual
Excentrics included
Finish: Chrome
Fixed spout
Flow rate (l/min - 3 bar): 9
Hot water tap
Installation type: Deck-mounted
Spout position: High
Twin lever control: 1/2 Turn
Type of cartridge: Standard headwork
Water connection thread: 1/2"

Technical drawings

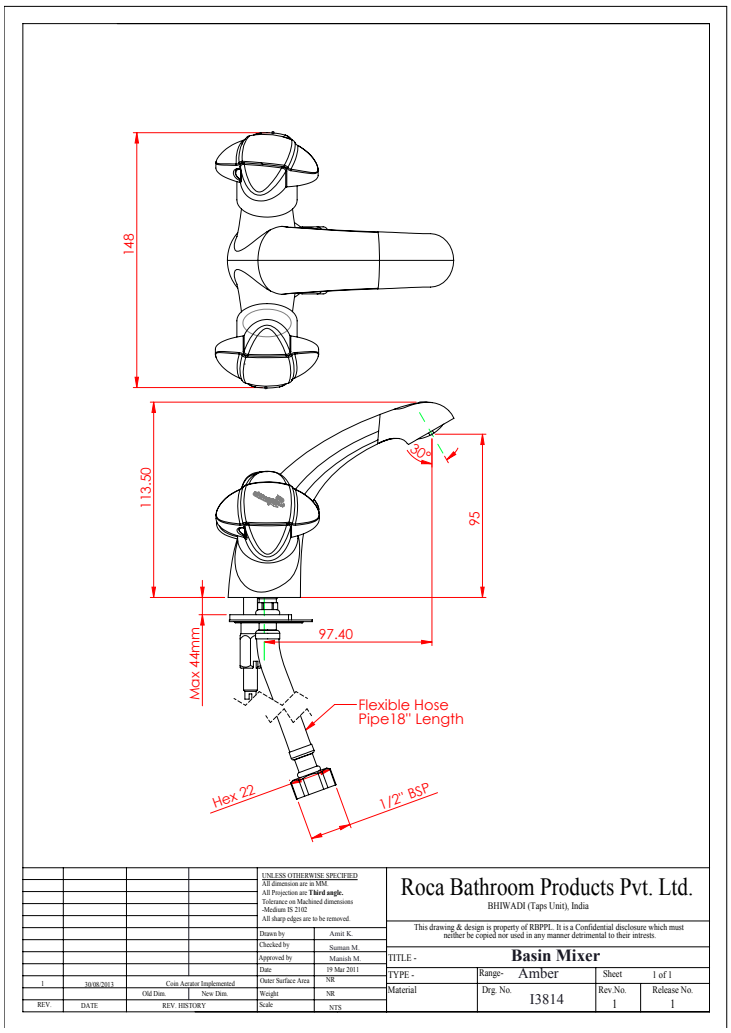

© Roca Bathroom Products Private Limited 2016. All rights reserved.