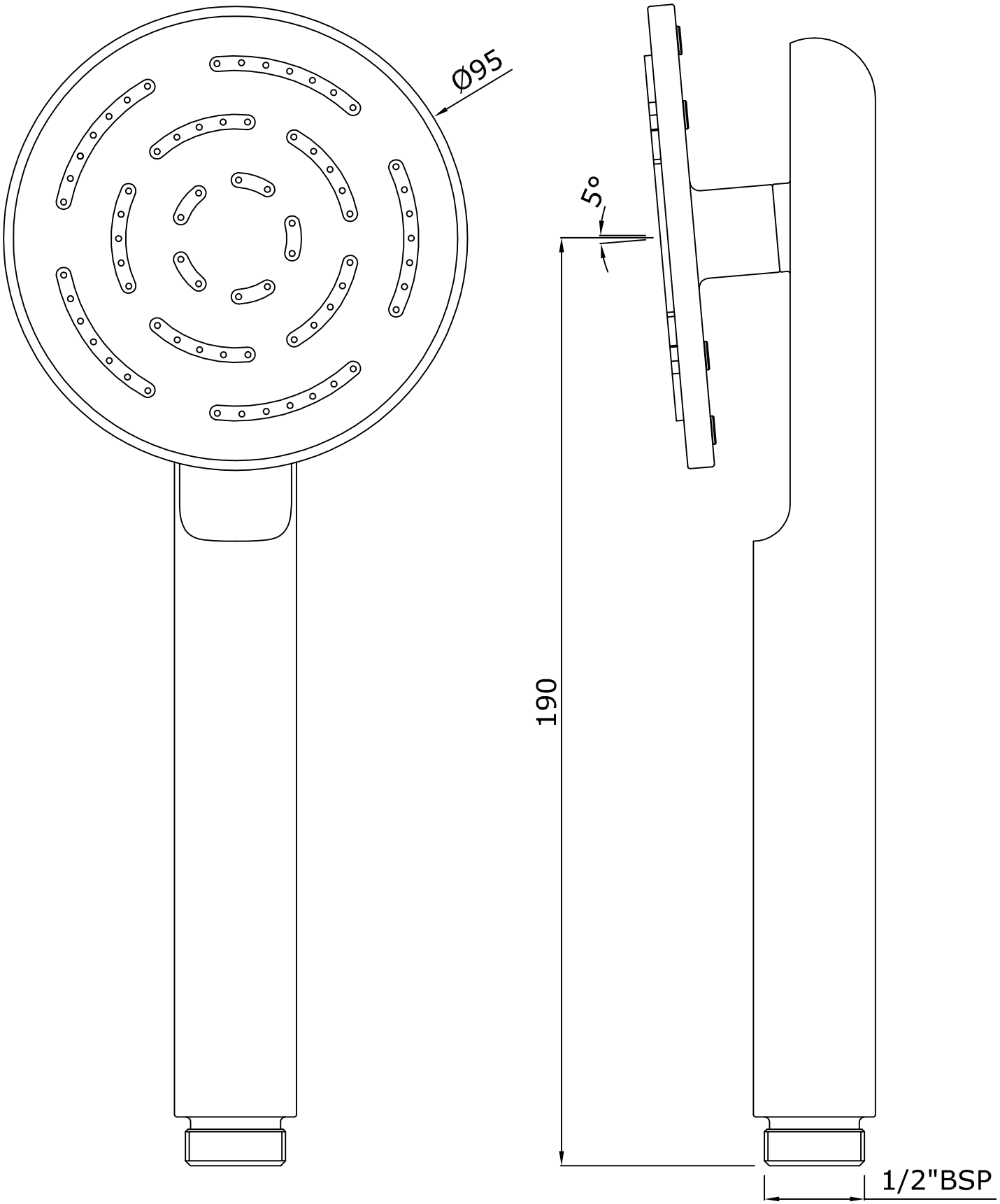Maze Hand Shower ø95mm Round Shape Single Flow	CAT.NO.HSH-1653